MODELS
457 RA

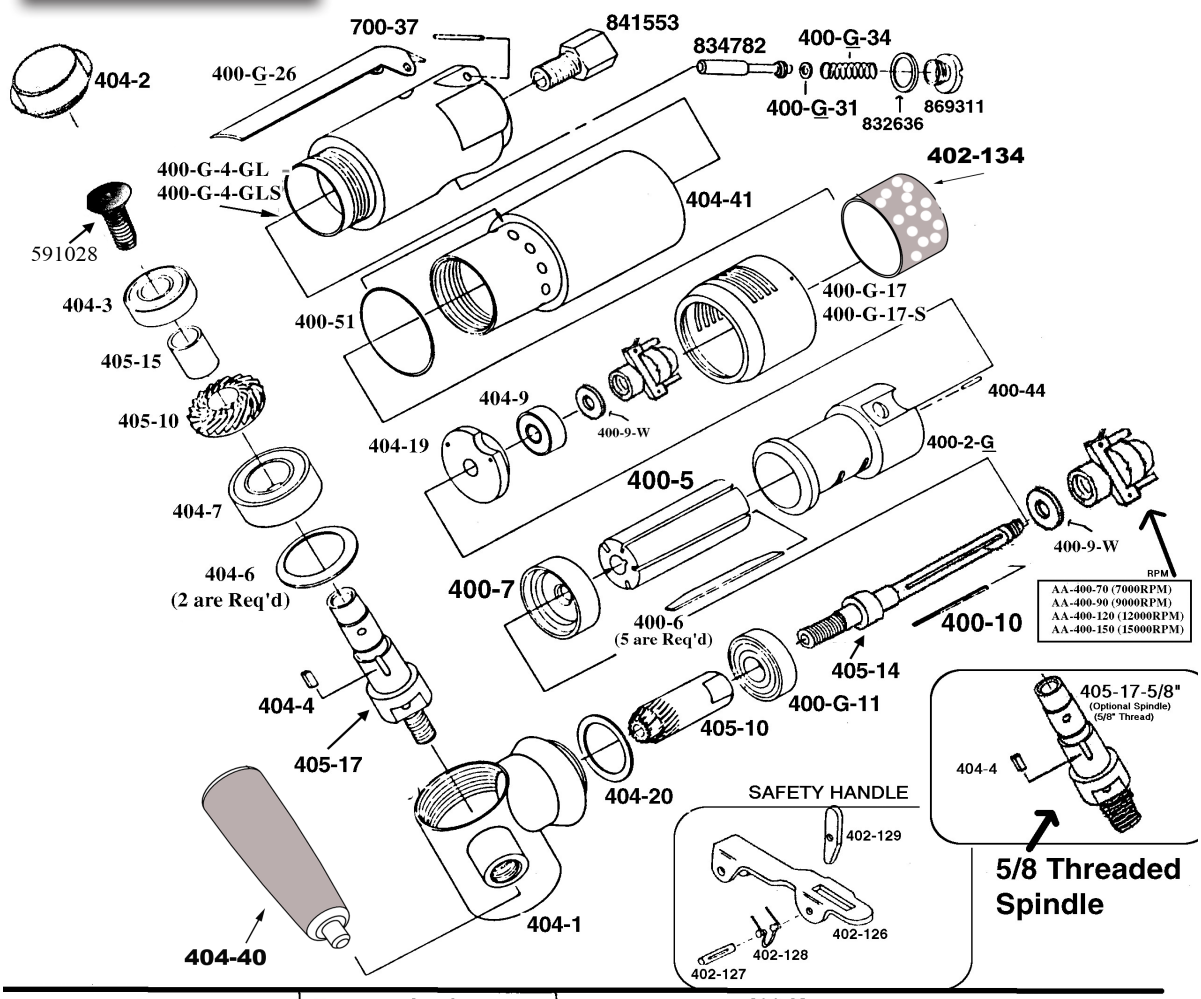

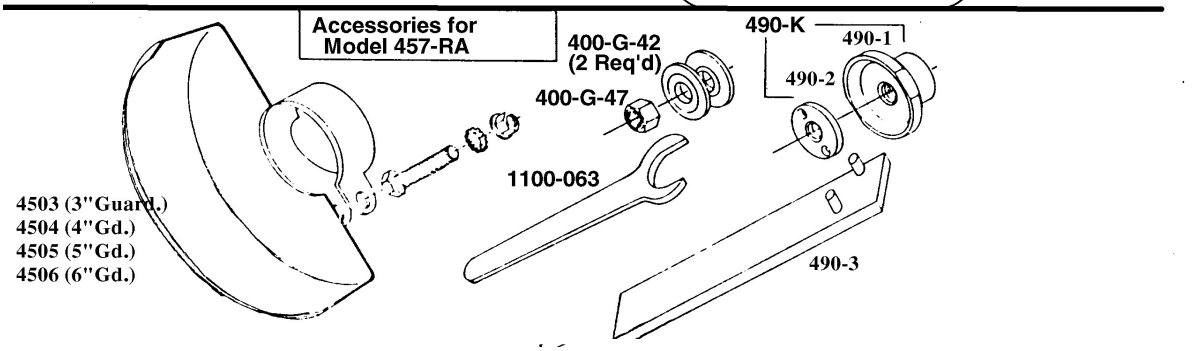

HENRY TOOLS, INC. Ph: (216) 291-1011 or (800) 826-5257